MONTHLY PROGRESS REPORTS

Period Covered

March 1-31, 1977

CONFIDENTIAL

2022151820

Source: https://www.industrydocuments.ucsf.edu/docs/xxxm0000

Accession No. 77-072

Copy No. _____

Issued To: _____

PHILIP MORRIS U.S.A.

Research Center

This report contains information which is CONFIDENTIAL to the business of the Company. The information must be carefully handled and not divulged to outside sources without express authorization.

This report is signed out to you individually. It is not transferable and must not be reproduced. Please return it to the Research Center Records Facility when it is not longer useful.

MONTHLY PROGRESS REPORTS

Period Covered

March 1-31, 1977

CONFIDENTIAL

2022151821

Date Issued: April 15, 1977

Source: https://www.industrydocuments.ucsf.edu/docs/xxxm0000

DISTRIBUTION WITHIN R & D

Dr. H. Wakeham
Dr. R. Seligman
Dr. T. Osdene
Mr. R. Thomson
Mr. B. Kosakowski
Mr. F. Resnik
Mr. J. Osmalov
Mr. L. Meyer
Mr. W. Mutter
Mr. F. Daylor
Dr. W. Gannon
Dr. P. Eichorn
Dr. F. Will III
Dr. T. Laszlo
Dr. D. Lowitz (3)
Dr. R. Fagan
Mr. Ken Burns
Mr. H. Merritt
Mr. H. Daniel
Dr. W. Johnson
Mr. W. Kuhn
Mr. E. Wickham
Mr. R. Carpenter
Dr. W. Dunn
Ms. C. O'Donohue

R. A. Pages
R. Jenkins
D. Teng
H. Spielberg

R. Tamol
W. Claflin
P. Gauvin
W. Carr
D. O. Clark
R. Ikeda
W. Geiszler
F. Utsch
G. Keritsis
G. Gellatly
L. Sykes
M. Johnston
M. Bourlas
E. Sanders
A. Manzelli
C. Kounnas
E. Oakley
D. Watson
N. Einolf
R. H. Newman
T. Newman
J. Whitman-J. Sherwood
W. Houck
E. Marx
W. Harvey
W. Farone
J. Swain
Central File (2)

L. H. Davis
R. Dawson (Complete Book Plus Annual & Semi-Annual)
A. P. Wolf

M. Hausermann (Complete Book Plus Annual & Semi-Annual)

2022151822

Source: https://www.industrydocuments.ucsf.edu/docs/xxxm0000

CHARGE NUMBER: Various

PROGRAM TITLE: Analytical Investigations

WRITTEN BY: M. C. Bourlas, W. R. Harvey, E. T. Oakley and D. C. Watson

DATE: April 6, 1977

I. TOBACCO ANALYSIS

A. CO_2 Expansion - A program has been initiated to determine what role the water soluble components of tobacco play in the CO_2 expansion process. E-55 tobacco has been water extracted and the solubles reapplied at various levels. The resulting tobacco was equilibrated and expanded with CO_2. The data is being evaluated.

B. Beta-Carotene/Xanthophyll - Standard curves for β-carotene an xanthophyll in ethanol have been normalized using the 887 cm^{-1} ethanol band. A linear dependence is observed over the range 10^{-6} to 10^{-4} moler/liter. Degradation rates for β-carotene in CCl_4 have been determined as a function of concentration, sample volume, and laser power. Degradation is currently being studied to distinguish oxidative and photochemical processes.

C. Colorimetric Determination of Nornicotine - Work has begun on development of an automated procedure for the determination of nornicotine. The recently received AutoAnalyzer II system is being used. Some difficulty is being encountered in pumping the nonaqueous solvents demanded by the reaction but initial results look encouraging.

D. Ammonia in Mainstream Smoke - Further analyses of mainstream smoke for ammonia have shown that the difference in values by the Robot Chemist and AutoAnalyzer II is real, with the AutoAnalyzer II giving higher ammonia values. Since on-line dialysis on the AutoAnalyzer II is one difference in the procedure, the dialysis was by-passed, but there was no significant change in results. Additional experiments will be done to determine if the difference is in reaction chemistry or in instrumentation.

E. Experiments are continuing for the development of a procedure for the determination of trimethylamine (TMA) and TMA·HCL in filler and smoke. Solubility of TMA and TMA·HCL in $CHCl_3$ precludes the use of $CHCl_3$ as a clean-up solvent. Other solvent systems will be tried. TMA·HCL standards (4 ppm) in H_2O have been found to have long term stability.

Manuel C. Bourlas

2022151823

Source: https://www.industrydocuments.ucsf.edu/docs/xxxm0000

PROJECT NUMBER: Various

PROJECT TITLE : Flavor Development

PROJECT LEADER: C. N. Kounnas

PERIOD COVERED: March 1-31, 1977

DATE OF REPORT: April 12, 1977

WRITTEN BY : C. N. Kounnas

I. Flavor/Product Development

Work for the development of an acceptable 5 mg tar cigarette continued. Results of a series of six VP tests versus Kent Golden Lights identified utilizing two blend systems showed that one model with cork tipping approached parity with KGL on preference. Eight additional VP tests versus Merit unidentified have been scheduled and will begin the week of April 11. The 5 mg models for these tests include the models tested against KGL, two modified versions of these, one model with a filter flavor, one with Filtrona filter and two others more recently developed. Blend, casing and aftercut flavor development is continuing and new models are continually being generated. The most promising models as demonstrated by internal and VP evaluations will be tested by national panels. Work for the development of 2 mg and 1 mg cigarettes was also conducted and two models of the 2 mg cigarette appear promising. Flavor additives being evaluated for this range of delivery include flavor release compounds prepared by Chemical Research. The low delivery program is being conducted jointly with the New Product Development Group and Technical Services.

Two VP tests of B&H Menthol versus B&H with cooling compound WS-14 and Merit Menthol versus Merit with WS-14 were completed. The former test used non-menthol smokers; the latter a mixture of menthol and non-menthol smokers. The results showed that in both tests the non-menthol smokers preferred WS-14 over menthol and the menthol smokers (in the Merit test) found the two cigarettes equal on the preference parameter. Three additional VP tests of WS-14 have been scheduled. These are Merit Regular versus Merit with WS-14 (menthol smokers; non-menthol smokers) and Merit Menthol versus Merit with carbon filter + WS-14. Other activities with WS-14 and other WS compounds are continuing. A POL test of B&H Menthol versus B&H Menthol with 50% synthetic menthol is in progress. Results are expected in May.

2022151824

Source: https://www.industrydocuments.ucsf.edu/docs/xxxm0000

Several new models of low lamina cigarettes were made and are under evaluation. These were made without carbon filters and are in the range of tar delivery of 1, 5 and 10 mg. Efforts to improve the mainstream and sidestream of these low lamina cigarettes are continuing and progress is being made.

Two VP tests of Merit Regular and Merit Menthol versus models with 100% licorice replacement are in progress. Results are expected in April. In progress also are two tests evaluating valerian replacements. These are also projected to be completed in April.

Request to fabricate cigarette models with Peters (a casing material) replacement was placed. This program, initiated earlier, has now become one of high priority because of recent sharp increases in the price of the natural material.

POL test of Parliament control versus Parliament DBC was completed. The differences found between cigarettes were small. Three HTI tests of Marlboro, B&H and Parliament DBC versus controls were cancelled following extensive internal evaluations by R&D and Manufacturing personnel. The DBC blend is now in use.

POL testing (monadic) of five distinctively-flavored cigarettes is in progress. The cigarettes are Merit-type and the distinctive flavors include chocolate-mint, anise, anise-orange, grape/raspberry and oregano. Results are expected in June.

II. Flavor/Product Assistance

Cigarettes for a VP test of Marlboro with 15% ET versus 15% steam tube-treated ET were found satisfactory both subjectively and analytically and were released for testing. The objective is to determine if the steam treatment has any effect on subjective response as seen by the consumer.

Work is in progress to develop an acceptable 10 mg Virginia Slims Menthol. The objective is to reach subjective parity with Virginia Slims Menthol control. This work is being conducted at the request of the Brand Development Group.

III. References

1. Notebook #6931; Pages 95-100.

2. Notebook #6943; Pages 99 and 100.

2022151825

Source: https://www.industrydocuments.ucsf.edu/docs/xxxm0000

3. Notebook #7050; Pages 54-100.

4. Notebook #7087; Pages 23-73.

5. Notebook #7110; Pages 1-17.

6. Notebook #7119; Pages 1 and 2.

C. N. Kounnas

C. N. Kounnas

/ec

2022151826

Source: https://www.industrydocuments.ucsf.edu/docs/xxxm0000

CHARGE NUMBER : Various

PROGRAM TITLE : Packaging Development

PERIOD COVERED: February 16 - March 15, 1977

DATE OF REPORT: April 1, 1977

WRITTEN BY : W. I. Carr

I. Metallized Paper - Package Liner Material[1]

A production machine trial run of the Nicolet 5-D metallized paper liner material was made in the Manufacturing Center on February 17. The duration of the run after making appropriate adjustments to the packer was about ten minutes.

The opinion at that time was that the metallized paper could be made to run on any of the soft pack machines but a new system for detecting missing overwraps and missing packages in the cartons would be required.

A quality audit showed no differences between the experimental and the control packages.

Storage tests indicated that the moisture-keeping properties of the packages depended on the quality of the overwrap seals. Under both Hot-Wet (90°F, 85% R.H.) and Supermarket (75°F, 40% R.H.) Conditions, the performance of the experimental packs and the standard packs were about the same. Under the Hot-Dry (110°F, 15% R.H.) Conditions, the experimental packages provided slightly better protection than the control packs. Examination of the overwraps showed that the experimental package overwraps had a more complete seal on the top end. Since no adjustments were made to the overwrap machine, the better seal on the tops and only on the tops of the experimental packages is attributed to the lower heat conductivity of the metallized paper.

Instron crushing tests of the cigarette packages showed that the metallized paper provided less crushing strength than the foil (1.1 kg versus 1.7 kg).

Both the metallized paper and the foil liner paper became stained in contact with the cigarettes. The degree of the color change depended upon the temperature under which the packages were stored. The color change of the two materials was different. The foil paper color change was toward yellow. The color change of the metallized paper was

2022151827

Source: https://www.industrydocuments.ucsf.edu/docs/xxxm0000

more uniform than that of the foil paper and tended toward brown.

An HTI test has been recommended to determine how the packages will perform with normal handling by the consumer.

II. Four's Packs Shelf Life Extension[2]

Preliminary tests indicate that carton overwraps are of value in extending the shelf life of Four's packages.

Storage tests were conducted with Marlboro (85) Four's cartons overwrapped with K-140 Cellophane and Hercules BXT Polypropylene film. Cartons with no overwraps were included in the test. Under Hot-Dry (110°F, 15% R.H.) Storage Conditions, the results were as follows:

	Tobacco Moisture (Oven Volatiles)			
	Initial	One Week	Two Weeks	Three Weeks
Polypropylene Carton Overwrap	13.0%	12.3%	11.3%	10.4%
Control (No Overwrap)	13.0%	9.9%	7.2%	6.3%
K-Cellophane Carton Overwrap	12.4%	11.1%	10.7%	9.4%
Control (No Overwrap)	12.4%	8.7%	7.1%	5.7%

The tests were also made under Hot-Wet (90°F, 85% R.H.) and Supermarket (75°F, 40% R.H.) Conditions. Under all three conditions, both overwrap films provided about the same level of protection. The cost of the polypropylene film, however, is about half of the cost of the K-140 Cellophane.

III. References

1. Notebook #7076; Pages 38-43.

2. Notebook #7076; Pages 46-48.

W. I. Carr

/ec

2022151828

Source: https://www.industrydocuments.ucsf.edu/docs/xxxm0000

CHARGE NUMBER:	0108
PROGRAM TITLE:	Mechanism for Smoke Formation
PERIOD COVERED:	March 1-31, 1977
PROJECT LEADER:	R. H. Newman
DATE OF REPORT:	April 6, 1977

Two special reports were written entitled "The Determination of the Propellants and Residue Combustion Products in Three Samples of Silicone Spray Lubricant" and "Computerized GC/MS Analysis of Volatile Products from E3/2-UO/UO Weigh Belt Combustion".

Direct introduction analysis MS for a dihydropyrazine derivative was performed. The analysis confirmed the presence of the parent compound, MW 354, and a small amount of material that is two mass units higher in molecular weight. Also, the presence of a peak at m/e 246 at a high probe temperature indicates the thermal decomposition of the starting material to form diphenyl-methylpyrazine.

Attempts were made to identify the volatile TPM decomposition products of Altosid found in mainstream smoke. It is known to give approximately 3% decomposition products from radioactivity determinations. 1R1 cigarettes without and with 10 ppm added Altosid were smoked, TPM collected and approximately 1/5 of the pad swept at 175°C into a GC column. The parent Altosid, estimated to be 720 ng, was easily measured; however, no significant change in the total ion current at retention times corresponding to the breakdown products was observed. There are four known areas containing activity. If they are equal in concentration, then they represent <6ppb in each component. It is not surprising that they were not observed over the normal volatile TPM. In order to detect and identify these components prior knowledge as to their structure will have to be obtained.[1,2]

A device for measuring the chest expansion of smoking subjects was constructed. The schematic below shows how the device will work.

2022151829

Source: https://www.industrydocuments.ucsf.edu/docs/xxxm0000

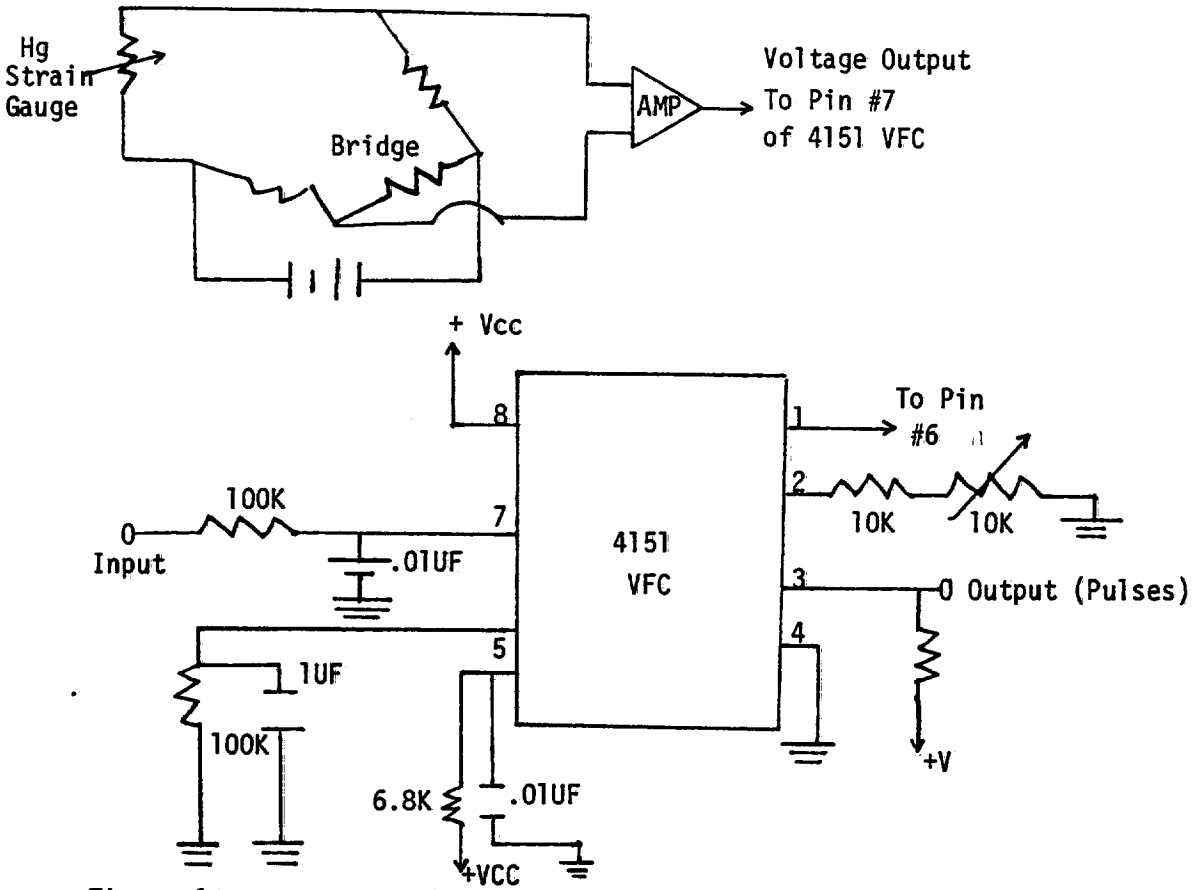

The voltage output is proportional to the resistance of the Hg strain gauge which is changed by subjects' breathing. The 4151 VFC output frequency of pulses is proportional to the applied input voltages.[3]

One major peak having a molecular weight of 96 has not been identified from the GC/MS pyrolysis of 1',1'-dimethylallyl 2,3,4,6-tetra-o-acetyl-β-D-glucopyranoside. The parent compound was pyrolyzed and the unknown peak trapped and submitted for IR and NMR analysis. IR indicated the presence of an unsaturated α-lactone with no methyl groups. The analysis by H'-NMR indicated only vinyl and vinylidene protons. Based on this information there are two possibilities (A and B) for the structure of this compound.

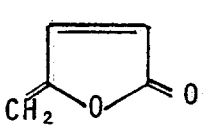

A

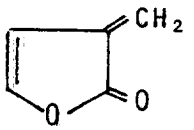

B

2022151830

Source: https://www.industrydocuments.ucsf.edu/docs/xxxm0000

Methyl 2,3,4,6-tetra-O-t-butylacetyl-α-D-glucopyranoside was pyrolyzed over a range of temperatures and the t-butyl-acetic acid released measured. The results are given below:

T (°C)	µg Acid/mg Sample
400	91
450	141
500	389
547	319
600	148

The β-methylvaleryl glucopyranoside was also pyrolyzed and the β-methylvaleric acid which was released was measured. The results are shown below:

T (°C)	µg Acid/mg Sample
300	2
350	13
400	40
450	70
500	138
550	122
590	89

REFERENCES

1. Kornfeld, R., 7033
2. Greene, F., 6798
3. Jones, W., 6965
4. Rundberg, E., 7046, 7130

/slb

2022151831

Source: https://www.industrydocuments.ucsf.edu/docs/xxxm0000

PROJECT NUMBER: 0307
PROJECT TITLE: Cigarette and Tobacco Measurement Methods
PERIOD COVERED: March, 1977
PROJECT LEADER: J. F. Sherwood
DATE OF REPORT: April 12, 1977

1. Dynamic Firmness

The split-tongue dynamic firmness transducer has been received. Initial tests have shown the firmness data generated using the split-tongue transducer to correlate very well with compacimetric measurements. Work is now underway to determine the optimum height difference between the front and rear halves of the transducer and whether the split-tongue transducer can eliminate the effect of changes in garniture tape thickness.[1]

One test using Merit filler and the standard firmness transducer indicates that different control equations may be required for different blends. Use of the control equation developed using Marlboro filler resulted in an average error of 10mg when used to predict the weight of cigarette rods made with Merit filler.

The dynamic firmness system was also used to test blends in Mr. J. M. Whitman's program to determine the feasibility of replacing ES with RL in blends. These tests showed general agreement between compacimetric and dynamic firmness measurements.

2. Microwave Moisture Meter

The thermocouple microwave detectors were installed on the development MK8 maker. Initial tests showed these detectors to be very stable.

J. F. Sherwood

J. F. Sherwood

Reference:

1. Notebook 6844, pp 65-68

2022151832

Source: https://www.industrydocuments.ucsf.edu/docs/xxxm0000

PROJECT NUMBER: 1005
PROJECT TITLE: Improved Semi-works Operations
PROJECT LEADER: J. M. Whitman
PERIOD COVERED: March 5 - April 7, 1977
DATE OF REPORT: April 12, 1977

I. Primary Processing

A. Notched Blade Program

1. All of the data were analyzed from the first series of tests. No apparent differences were found between the three notch widths tested or between them and the control with respect to cut filler cylinder volume, sieve fractions, or cigarette making efficiency.

2. In the areas of compacimetric firmness and coal strength, there was a trend favoring the longer strands (higher notch width). Since the control performed better than any of the notched blades in these areas and since it had the highest average particle length, blades with greater notch widths (30 and 36mm) will be ordered.

B. Menthol Losses

A series of tests to evaluate the effects of the type of pump and feed system, the aftercut solutions, and the covering of the gap between the aftercut cylinder and the exit transition piece were run the week of 4/4/77. The data are being analyzed.

C. Neoprene Conveyor Belting

1. The sample of the type belting to be used in the new Manufacturing Center installation has been running on the channel conveyor in the Pilot Primary for ~1800 hours.

2. The surface of the belt which would contact the tobacco is in good condition. However, the back side of the belt has continued to be worn, resulting in a significant build-up of a fine dust on the framework of the conveyor. This degree of wear has not affected the overall integrity of the belt.

II. Blend Component Studies

A. Replacement of ES with RL

1. The differences in filling power, resulting from the

2022151833

Source: https://www.industrydocuments.ucsf.edu/docs/xxxm0000

substitution of RL for ES in the 78-1 and 81-4 Marlboro blends, were difficult to precisely define.

2. The program was, therefore, changed to evaluating each component (ES or RL) in blends, at the 20, 30, and 40% levels, in which the only other component was a single grade of bright. Limited testing to date has shown that for each percent of ES replaced with RL, a loss in filling power of ∿0.3% occurs. Additional testing with these type blends is in progress.

B. Blend Components Study V

1. Testing of C.V. - O.V. on each component at three humidity levels (55, 60, and 65% R.H.) was completed.

2. Compacimetric testing of 100% cigarettes made from each component resulted in many low (firm) values. These values were in a range outside of that normally tested. Therefore, the cigarettes will be remade at lower weights and retested.

C. Prediction of Tar Delivery

1. Analysis of the ash data on individual grades of bright and burley showed a reasonable correlation with tar delivery. Alkaloids gave a good correlation to nicotine delivered from the bright grades.

2. Additional testing is in progress to define the 95% confidence levels of these correlations.

III. Stem Processing

Work in this area has been placed in a hold position pending the outcome of the RL replacing ES program.

J. M. Whitman

2022151834

Source: https://www.industrydocuments.ucsf.edu/docs/xxxm0000

CHARGE NUMBER: 1101

PROGRAM TITLE: ENTOMOLOGICAL RESEARCH

PROJECT LEADER: M. A. Manzelli

PERIOD COVERED: March 1-31, 1977

DATE OF REPORT: March 31, 1977

I. INSECT GROWTH REGULATORS (IGRs)

-Tests have been initiated to determine the chemosterilant activity of PRECOCENE II against the cigarette beetle.[1]

-An additional 48 hogsheads of burley strip have been treated at the Stemmery with 10 ppm ALTOSID®.[2]

-Burley stem treated at the Stemmery on February 16, 1977, with 10 ppm of ALTOSID® have been chemically assayed for residue. The samples, collected after the stem had left the dryer, averaged 6.5 ppm of ALTOSID®.[3]

II. CIGARETTE BEETLE PHYSIOLOGICAL STUDIES

A series of adult feeding tests employing a number of dyes in the food medium are yielding data indicating that digestion and absorption processes are present.[4]

III. ASSISTANCE TO AREAS OUTSIDE R & D

A second series of tests was conducted at the Primary to demonstrate that ES (expanded stem) packed 300-350 lbs. in polyethylene lined hogsheads and exposed to a Mohr unit for three minutes at 160°F would not retain any stages of the cigarette beetle in a viable condition. The temperatures in the bottom third of the ES filled hogsheads ranged from 153°-160°F.[5]

IV. REFERENCES

1. Long, J. S., Notebook No. 7008, p. 38.
2. Lehman, R. M., Notebook No. 7105, p. 17.
3. Walker, G., Notebook 6028, p. 80.
4. Minor, M. F., Notebook 6999, p. 65.
5. Minor, M. F., Notebook 6999, pp. 58, 59.

/nwp

Art Manzelli

2022151835

Source: https://www.industrydocuments.ucsf.edu/docs/xxxm0000

CHARGE NUMBER: 1300/1307

PROGRAM TITLE: Reconstituted Tobacco Development

PERIOD COVERED: March 1 - 31, 1977

PROJECT LEADER: G. Gellatly

An Annual Report was written during this period.

G. Gellatly

/jl

2022151836

Source: https://www.industrydocuments.ucsf.edu/docs/xxxm0000

CHARGE NUMBER: 1503

PROGRAM TITLE: Modified Smoking Materials

PERIOD COVERED: March 1 - 31, 1977

PROJECT LEADER: G. D. Keritsis

An Annual Report was written during this period.

G. D. Keritsis

G. D. Keritsis

/jl

2022151837

Source: https://www.industrydocuments.ucsf.edu/docs/xxxm0000

PROJECT CHARGE: 1702

PROJECT TITLE: SELECTIVE FILTRATION

PERIOD COVERED: March 1 - March 31, 1977

PROJECT LEADER: A. J. Kassman

DATE OF REPORT: April 6, 1977

CO AND NO REMOVAL

The Co/Al_2O_3 catalyst has been found to give two bands in optical reflectance which are not associated with cobalt. One, at $\sim$ 250 nm, is due to the superoxide ion, O_2^-, which has been identified in the electron paramagnetic resonance (EPR) spectrum. The second band, located at < 220 nm, is as yet unidentified. Since the superoxide ion is not expected to take part directly in a catalytic process, this band may be associated with the catalytically active oxygen species. The $O^=$ ion has been eliminated as a possibility because of the absence of other absorbance bands that would be associated with it. Absorbance bands for O^- and OH^- are known at 185-205 nm, and these species would be highly reactive for surface oxidation. However, these species have been undetected in EPR and their concentration, if present, would have to be extremely low. Another possibility, the peroxide ion, $O_2^=$, cannot be observed in EPR and other means are being investigated to determine its presence.

FILTER CONSTRUCTION

Based on the results of high speed cinematography and descriptive panel evaluations we have observed an association between flow characteristics and some subjective response features. These associations, if real, would be highly emphasized in low delivery systems. We are constructing a series of flow baffles which can be attached to filters. In this way cigarettes do not have to be altered to change the smoke delivery pattern, but merely attached to the baffle. Smoke delivery patterns from the baffles will be filmed to ensure that the desired characteristics have been achieved before subjective evaluation is pursued.

CO_2 IMPREGNATION SYSTEM DESIGN

A majority of the calculational problems involved in modelling the impregnation system have been resolved. Criteria were formally established for determining critical flow, position of normal shock waves, receiver and reservoir conditions, and pipe conditions. Experiments at the pilot plant are in progress

2022151838

Source: https://www.industrydocuments.ucsf.edu/docs/xxxm0000

for providing some additional data for checking the validity of the model and the computational procedures.

REFERENCES

A. J. Kassman, Notebook 6612, pp. 72-74.
D. B. Losee, Notebook 7006, p 13.
R. W. Dwyer, Notebook 6897, pp. 56-59.

/ev

A. Kassman

2022151839

Source: https://www.industrydocuments.ucsf.edu/docs/xxxm0000

PROJECT CHARGE: 1706

PROJECT TITLE: SPECIAL PROBLEMS

PERIOD COVERED: March 1 - March 31, 1977

PROJECT LEADER: A. C. Lilly

WRITTEN BY: A. C. Lilly and Peter Martin

DATE OF REPORT: April 11, 1977

ELECTRICAL PERFORATION OF TIPPING PAPER (written by A. C. Lilly)

Experiments are under way involving the on-the-fly measurement of paper porosity prior to the design of feedback circuitry to control the porosity by controlling the average spark current. The initial experiments involve a pressure drop measurement and measurements have been carried out at speeds up to 1000 feet per minute.

A new electrode head made of aluminum has been installed in the R and D unit. This was designed in order to overcome the thermal problems with the polycarbonate heads. The initial results have been good.

The patent on the perforator is almost complete. It is expected to be filed in about one week.

Discussions were held with four CO_2 laser manufacturers regarding the use of lasers in paper perforation. The problems in our application are the large number of holes and the high paper speed. It is questionable as to whether the CO_2 laser can be Q-switched fast enough for this application.

CO_2 TOBACCO EXPANSION PLANT MODEL (written by Peter Martin)

The work was resumed on this project in late February with the goals of providing some specific results on the receiver, reservoir and pipe conditions under specified operating parameters.

The flow conditions can be separated into three sections:

1) Completely supersonic flow,
2) completely subsonic flow,
3) a transition phase between the above two which is controlled by the transmission of a normal shock from the receiver to the reservoir.

During this period the work has concentrated on the receiver and the reservoir, and the supersonic and transition phases.

2022151840

Source: https://www.industrydocuments.ucsf.edu/docs/xxxm0000

We have found that the equation of state is appropriate to describe both normal gas and normal liquid phases. We have used this to enable us to calculate the enthalpy, the entropy and the velocity of sound ($=\partial P/\partial G$ at constant S) at any known temperature and density.

The flow of the fluid in the nozzle has been modelled as an isentropic flow of a frictionless supercooled gas, where the transition to an equilibrium state accompanies its entering the main duct. The type of flow is governed by the conditions in the throat of the nozzle. A Mach one velocity ratio at this point corresponds to supersonic flow in the duct. The parameters of the initial slug and the resultant flow conditions are determined by forcing isentropic flow and by equating the enthalpy loss from the reservoir to the gain in kinetic energy.

The variation of the receiver parameters is calculated by equating the change in total energy to the enthalpy carried across the pipe-receiver boundary by the incoming slug. The same approach will be adapted with the reservoir although, to date, all test runs have held its parameters constant.

The transition phase has been changed to allow the normal shock wave to propagate down the pipe (against the flow) in a finite time, as opposed to instantaneously as it was in previous models. The movement and creation of this shock wave is governed by the three standard conservation equations (mass, momentum and energy) with the constraint that the receiver pressure exists on the streamline.

The program can now be run in an on-line mode (as opposed to Batch) using the Fortran Debug Package (FDP). This was achieved by halving the major dimensions of the program and by obtaining permission from J. Wasiuk (computer coordinator) to utilize more core than normally allowed in an on-line operational mode. The results of this have been a more rapid and easier detection of program error and improvements.

A set of experimental results have been obtained from F. Utsch for the pressure and temperature in both the reservoir and receiver during several pilot plant runs. The experimental configuration does not exactly match the program's allowed configuration, but it is hoped that they are close enough to allow us to compare theoretical predictions, and to allow verification or confident amendments to our methods of handling the vena contracta and frictional effects.

An initial approach has been made to the Newport News Shipbuilding Company to determine whether any of the computer

2022151841

Source: https://www.industrydocuments.ucsf.edu/docs/xxxm0000

programs that they have for handling steam transportation could be applied to this problem. J. Wasiuk is to be thanked for the initial idea and for making the initial contact.

Cliff Lilly III

Peter Martin III

/ev

2022151842

Source: https://www.industrydocuments.ucsf.edu/docs/xxxm0000

PROJECT CHARGE: 1706

PROJECT TITLE: TOBACCO PHYSICS

PERIOD COVERED: March 1 - March 31, 1977

PROJECT LEADER: D. L. Simpson

DATE OF REPORT: April 12, 1977

An Annual Report was issued and Project Review given during this period.

THERMAL PROPERTIES OF TOBACCO[1,2,3,4]
(Tiller, Majewski, Osborne, Quinn and Simpson)

In work related to the cellulosic material modification experiments of Simpson and Majewski in which the pyranose ring is opened between C2 and C3 to yield dialdehydes linked by glycosidic bands, Tiller has obtained fast-scan DTA curves for soluble starch and dialdehyde starch. The DTA spectra have been compared to that of α-cellulose. Soluble starch, which is α-1,4-linked, is thermally less stable than alpha-cellulose, which is β-1,4-linked. The dialdehyde starch is also more unstable than the alpha-cellulose and exhibits four or five endothermic processes in comparison to the two of alpha-cellulose. Since soluble starch is thermally less stable than α-cellulose and the dialdehyde starch is less stable than the soluble starch, one could infer that dialdehydic cellulose would be thermally less stable than cellulose; however, we have not yet run a fast-scan thermogram with dialdehydic cellulose. This will be done when the material is obtained.

Tiller has also continued the work on obtaining fast-scan DTA spectra for the pyrolysis solid residues from Majewski's work with cut uncased MF (J6BCM) and water extracted cut uncased MF (J6BCM). The objective here is to relate the energetics from DTA to the tobacco weight loss and chemical characteristics of the condensed volatiles from the pyrolysis studies.

Osborne and Quinn are currently determining the dynamic evolved gas analysis (DEGA) spectra for the same solid pyrolysis residues to determine the kinetics of CO and CO_2 production as a function of pyrolysis temperature. Runs have been made for CO_2 at 0.5°C/sec for residues obtained at 125°C, 165°C, and 185°C. These data will be analyzed by the next report.

COMBUSTION AND PYROLYSIS[2,5] (Majewski and Bebbs)

Bebbs has started the smoking experiments with cigarettes made from the pyrolysis solid residues of water extracted, cut,

2022151843

Source: https://www.industrydocuments.ucsf.edu/docs/xxxm0000

uncased MF (J6BCM). The residues are from the pyrolysis carried out at 145°C, 165°C, 185°C, and 200°C and were supplied by Majewski. The cigarettes are being smoked at fixed distance intervals (7 mm) with a fixed number of puffs (6 puffs) in order to remove the problem of different puff count and amount burned which results from the different residue compositions. The objective is to relate the TPM and nicotine deliveries of cigarettes made from pyrolysis residues to the pyrolysis weight loss of the original tobacco, weight of volatiles collected during pyrolysis, weight of pyrolysis condensables extracted by water, weight of pyrolysis condensables extracted by methylene chloride, and the DTA thermograms of the original tobacco and pyrolysis residues.

COMBUSTION MATHEMATICAL MODELLING[6,7] (Waymack and Simpson)

Parameters were determined to yield a solution to the new smouldering model reported last month. The results were sharper temperature and density gradients.

During the latter part of the period an approximate global kinetics scheme for CO and CO_2 production was added to the model. The results when obtained will be checked against the CO and CO_2 concentration profiles obtained by G.C. probing techniques.

REFERENCES

1) C. O. Tiller, Notebook 7003, pp. 93-100 and Notebook 7123, pp. 1-6.
2) T. Majewski, Notebook 7040, page 78.
3) S. Osborne, Notebook 7089, pp. 11-14.
4) M. Quinn, Notebook 7002, pp. 80-88.
5) J. Bebbs, Notebook 6907, pp. 82-87.
6) B. Waymack, Notebook 7082, pp. 37-46.
7) D. Simpson, Notebook 6984, pp. 97-100.

Daniel Simpson

/ev

2022151844

Source: https://www.industrydocuments.ucsf.edu/docs/xxxm0000

PROJECT CHARGE: 1708

PROJECT TITLE: PHYSICAL & CHEMICAL PROPERTIES OF TOBACCO

PERIOD COVERED: March 1 - March 31, 1977

PROJECT LEADER: C. B. Hoelzel

DATE OF REPORT: April 12, 1977

Sufficient data has been obtained from testing cigarettes in the Instron to allow us to conclude that the testing method gives useful and meaningful information. A status report is in preparation.

A physical model of the CV test has been derived, based on cylinder wall friction and tobacco compressibility. The model makes the non-realistic assumption of a uniform isotropic pressure distribution within the tobacco bed. Nevertheless, the computed results agree qualitatively with observed data and provide considerable physical insight.

A mathematical relaxation model, based on "spring and dashpot" elements has been programmed into the computer so that experimental relaxation data can be fitted and described in terms of equivalent mechanical elements.

The study of water extracted bright tobacco, which was described last month, has been started. Thus far, it has been shown 1) that the equilibrium OV of uncased bright is unaffected by freeze drying; 2) that there is little, if any, difference between equilibrium OV of a control vs the extracted, recombined and re-equilibrated sample, nor is there any real difference between the control and the materials which were extracted and re-equilibrated without recombination; 3) that the water solubles (which comprise ca 68% of the total) re-equilibrate to 13.6% OV and the residual fiber re-equilibrates to 11.4% OV.

Documentation for the PLOT.77, FILES.77 and TEXT.77 systems has been prepared. A User's Guide for these computer-assisted, self-teaching systems has been prepared and is undergoing proofing and revision.

References

H. A. Hartung, Notebook 4593, pp. 93, 94.
B. C. LaRoy, Notebook 7052, pp. 80-87.
J. C. Crump, Notebook 6924, pp. 81-83.

CB Hoelzel

/ev

2022151845

Source: https://www.industrydocuments.ucsf.edu/docs/xxxm0000

CHARGE NUMBER: 1801
PROGRAM TITLE: Tobacco Processing
PERIOD COVERED: March 1 - 31, 1977
PROJECT LEADER: F. V. Utsch

I. FILLER EXPANSION

A. CO_2 Process Development - Phase II

Low pressure gaseous CO_2 trials (60 psig) continued to show a product CV potential of 60-65 cc/10g. Recent batches of tobacco appear to be giving inordinately high expansion levels, however, and additional runs with other tobacco lots will be necessary to verify the results.[1]

Pretreatment of the feed tobacco with 5% weight isopropanol to "soften" the tobacco and aid penetration of gaseous CO_2 added about 5 cc/10g to the product CV in trials conducted at six pressure levels from 100-800 psig. The effect may be due primarily to the added impregnant qualities of the alcohol itself, however, and the use of isopropanol is probably of little practical value.[2]

Samples processed using low pressure liquid CO_2 (250 psig) gave a product CCV of 79 cc/10g. This is higher than would normally be expected and additional runs with other tobacco lots are planned.

Studies to evaluate CV and sieve characteristics of DIET as a function of bright tobacco grades are continuing. A comparison of the effects of the cyclone versus tangential separator on product sieves at equal exit OV and product CV is also underway.[3]

Samples of five grades of Canadian tobacco were DIET expanded for B&H, Canada.

Additional samples of extracted tobacco were DIET expanded for Project 8204.[4]

B. Post Expansion Heat Treatment (PEHT)

A head-to-head comparison of static bed versus vibrating conveyor PEHT of DIET gave comparable CV gains for comparable treatment conditions. Thus, it is thought that the static bed data is probably reliable for scale-up considerations.

DTA and DTG analyses of PEHT versus control DIET showed no significant differences in response of the materials.[6]

C. Rapid Reordering

All parts necessary for the Westab water-spray reordering trials have been received. Testing should begin by late April.

2022151846

Source: https://www.industrydocuments.ucsf.edu/docs/xxxm0000

D. Continuous ET Impregnation

Expansion trials of MF blend using 1% and 2% levels of ammonium carbamate powder and bulking times of 2-30 hours gave very little CV increase compared to the tower processed control sample. Samples processed using 10% carbamate gave a product CV of 66 cc/10g at 12% OV which may be of interest for a total blend expansion process.[7]

E. Filler Stiffening

Results from the initial trials evaluating five selected grades of food starches from Corn Products Co. (C.P.C.) were discussed with C.P.C. personnel. Several additional low-temperature trials are planned to conclude the evaluation.

F. Puritan Cereal Gun

Puffing trials of whole stem, filler, and cereal grains are in progress. A model C.C. slicer is being rented from the Urschel Co. to study slicing techniques for the puffed stems and cereals.

II. REFERENCES

[1]Notebook 6696, p. 41.
[2]Notebook 6696, p. 42.
[3]Notebook 6696, pp. 39, 44.
[4]Notebook 6696, p. 45.
[5]Notebook 7094, pp. 7 - 40.
[6]Notebook 7094, pp. 41 - 43.
[7]Notebook 6696, p. 43.

F. V. Utsch

F. V. Utsch

/jl

2022151847

Source: https://www.industrydocuments.ucsf.edu/docs/xxxm0000

CHARGE NUMBER: 1803

PROGRAM TITLE: New Primary Processes

PERIOD COVERED: March 1 - 31, 1977

PROJECT LEADER: T. A. Newman

I. Microwave Processing

The 915 MHz power supplies were installed and the applicator modifications were completed. Initial equipment checkout resulted in several electrical anomalies in both 915 MHz power supplies. An engineer from Gerling Moore was sent to troubleshoot these problems and repair is currently in progress.

Experiments were initiated using the 2450 MHz equipment to examine the conditions necessary to kill weed seeds in farm soil. Results will be used to evaluate the economic feasibility of sterilizing tobacco fields prior to planting. Hopefully, this would allow tobacco seeds to be planted directly in the field, thereby eliminating the step of transplanting the seedlings from beds. Initial results[1] show that morning glory, ragweed and carb grass seeds do not germinate after soil temperatures have been raised to 200°F. As might be expected, the energy requirements (application times) are a strong function of soil moisture. Tests are in progress to better define the energy versus moisture characteristics.

II. Pneumatic Conveying

The rotary valve tests were completed using both ET and filler. Sieve results[2] showed no statistical trend that would indicate these materials experienced any reduction in piece size when passed through this particular rotary valve.

The equipment for the pneumatic conveying installation has been received and installed. Electrical and plumbing hookups should be completed in several weeks.

III. References

[1]J. C. Lang - Notebook 7066, p. 16.

[2]" " " - " " , pp. 19 - 22.

T. A. Newman

T. A. Newman

/jl

2022151848

Source: https://www.industrydocuments.ucsf.edu/docs/xxxm0000

CHARGE NUMBER: 1804

PROGRAM TITLE: CO_2 Expansion

PERIOD COVERED: March 1 - 31, 1977

PROJECT LEADER: L. M. Sykes

I. Post Expansion Heat Treatment

Further study of continuous post expansion heat treatment (PEHT) of DIET tower product using the vibrating conveyor has indicated an increase in CV with increased velocity in the one to three feet/second range. However, the increased velocity was coupled with increased residence time due to bed fluidization. Also, at three feet/second velocity, plug flow through the conveyor deteriorated.

A test to evaluate subjective and compacimetric properties of continuous PEHT DIET is in progress. The PEHT filler for this test showed 25 CV (12 CCV) units increase after rapid reordering compared to the control DIET.

Most of the PEHT DIET has been rapidly reordered in a reordering cylinder. Results to date have shown similar CV losses for control and PEHT DIET through the reordering cylinder. These CV losses are slightly greater than what has been experienced with Proctor and Schwartz reordering. Sieve testing shows a 5-10% longs reduction of PEHT material through the reordering cylinder. Design modifications to reduce this breakage are being investigated.

Direct expansion of both liquid and gas impregnated MF bright in the vibrating conveyor has given relatively poor CV results with values around 50 cc/10g for both impregnations.

II. Gas Impregnation

Utilizing the newly installed bulker/feeder, gas impregnation experiments have begun involving 800 and 500 psig impregnation pressures and one- and ten-minute impregnation times. Consistent with past experiments in the Phase III system, 800 psig gave better CV results than 500 psig. However, the CV levels at 800 psig (~60 cc/10g) were significantly lower than liquid impregnated values. Impregnation time showed little effect at either pressure.

Post expansion heat treatment of gas impregnated DIET was carried out at 400°F with steam for 40 seconds. Little CV improvement was found with 500 psig DIET; however, 800 psig DIET showed CV increases ranging from 8 to 15 units (6 to 10 CCV units). These results are consistent with earlier findings that CV increase with PEHT is greater for well expanded filler.

III. Miscellaneous

Five additional samples have been expanded for Airco.

L. M. Sykes

/jl

2022151849

Source: https://www.industrydocuments.ucsf.edu/docs/xxxm0000

CHARGE NUMBER:	1901
PROJECT TITLE:	BIOCHEMICAL MODIFICATION OF TOBACCO
PERIOD COVERED:	March 1-31, 1977
PROJECT LEADER:	D. M. Teng
DATE OF REPORT:	March 31, 1977

I. NITRATE REDUCTION[1]

A proposal was prepared to study the feasibility of applying microbiological nitrate reducing systems to the RL process for the reduction of oxides of nitrogen in smoke generated from this sheet material. This proposal was approved.

The study will include the selection of suitable microorganisms, determination of their growth kinetics, selection of growth media and the optimization of necessary conditions. When a suitable system is established, it will be applied to the RL process to determine the feasibility of applying this system to reduce oxides of nitrogen in the smoke of treated materials.

A bench scale fermenter and ancillary hardware has been ordered and should be delivered in 8-10 weeks.

De-nitrification microorganisms have been ordered from the American Type Culture Collection.

A study is under way to investigate the analytical methods to be used in this study. The primary goal is to establish simple and reliable methods to determine nitrate and its metabolic intermediates when a pure nitrate system is used. Nitrate can be determined by a nitrate electrode. When the nitrate concentration is high or the nitrate concentration is larger than the nitrite concentration a direct reading of nitrate can be done with the electrode without any correction required. Survey of analytical methods for nitrate (besides the nitrate electrode method) and other intermediates is in progress.

II. TREATMENT OF BURLEY STEM WITH CELLULASE[2,3]

Trichoderma viride cellulase was used to treat burley stem materials. Following results were observed.

2022151850

Source: https://www.industrydocuments.ucsf.edu/docs/xxxm0000

1) Reducing sugars can be produced from hammer-milled burley stem in reasonable quantity (20% conversion).

2) Further ballmilling of the material to 40-mesh particle size increases the conversion to 30%. Further milling to smaller sizes has no additional effect on the rate of conversion.

3) A 24-hour fermentation produces about 70% of the sugars found in a 48-hour fermentation.

4) The maximum cellulose degradation occurs at a slurry concentration of 1.5% whereas the maximum sugar formation per unit enzyme occurs at a slurry concentration of 15%.

Additional experiments are either planned or are in progress to determine time and temperature of fermentation of burley stem and RL base web pulp to yield chemically and subjectively superior products.

III. POLYGALACTURONASE PURIFICATION[4]

Three different methods were tried in the purification of commercial pectinase. Pectin methylsterase could not be isolated from polygalacturonase. Other purification methods are under investigation.

IV. REFERENCES

1. D. Teng/B. Semp, Notebook 7121.

2. B. Semp, Notebook 6862.

3. S. Tenhet, Notebook 6827.

4. G. E. Morris, Notebook 6883.

/nwp

2022151851

Source: https://www.industrydocuments.ucsf.edu/docs/xxxm0000

CHARGE NUMBER: 2100

PROJECT TITLE: NEW PRODUCT DEVELOPMENT

PROJECT LEADER: P. N. GAUVIN

PERIOD COVERED: March 1-31, 1977

I. NEW PRODUCTS

A. 5 mg Candidate

VP testing of two new 5 mg candidates using the Merit blend with modified casing and after-cut flavors (CFU and CFW blends) versus Kent Golden Lights was completed. Both candidates were tested with cork and white tippings. The CFU blend candidate with cork tipping was equal in preference to Kent Golden Lights (identified). At present, additional 5 mg candidates have been made and are awaiting VP testing versus unidentified Merit 85s. The best candidate(s) from VP testing will be HTI tested as soon as possible.

Currently, the 5 mg program is divided into three areas. These include (1) a possible Parliament Lights candidate, (2) a free-standing candidate and, (3) a 5 mg candidate with miniumum gas phase delivery. All three areas are actively being pursued.

Various modifications to a 5 mg candidate are under investigation to improve the marketing image. The most promising modifications include fermented tobaccos in the blend, slim circumference, and a Filtrona "Gear" filter. These approaches are being evaluated internally and VP testing will follow, if warranted.

A 5 mg menthol candidate is under development. In addition, 5 mg, 100 mm models, Slim and standard circumference, have been assembled. These candidates will be VP tested once the appropriate flavor system is indicated from VP testing of the 85 mm candidate.

B. Modified Parliament 100 "H"

A Parliament 100 "H" with a reduced carbon loading (40 mg) has been approved for shipment to HTI testing versus the current production Parliament 100.

2022151852

Source: https://www.industrydocuments.ucsf.edu/docs/xxxm0000

II. SMOKER SIMULATOR STUDIES

A product study of the Merit Menthol 100 versus the B&H Menthol 100 and Kool was completed. Smokers apparently were influenced by the dilution and the lower RTD of the Merit. These two design parameters caused increased puff volumes and maximum flow rates for the Merit versus the B&H and Kool. Based on nine puffs, the Merit was 10% lower in tar than the B&H but equal in tar to the Kool.

A new panel is being selected for repeated use in basic studies. Ten R&D smokers representing seven Philip Morris brands have smoked on recorders and saved butts from their regular cigarettes over a one week period. Butts are being examined for length and nicotine residue to further examine possible differences in smoking profiles on and off the recorders.

P. N. Gauvin

/bjn

2022151853

Source: https://www.industrydocuments.ucsf.edu/docs/xxxm0000

CHARGE NUMBER: 2105

PROJECT TITLE: Filter and Cigarette Process Development

PROJECT LEADER: W. A. Nichols

PERIOD COVERED: March, 1977

I EXTRUSION SYSTEMS DEVELOPMENT

Design of the frame assembly for the high speed extrusion line has been completed. Detailed drawings will be sent out for bids shortly. Basic electrical wiring diagrams are complete. Electrical components are being purchased.

II WRAPLESS FILTERS

Two patent applications for the wrapless filter process have been rejected based on conflict with a recent Baumgartner patent. This action will be contested and does not affect the third patent application on the process.

Having had no success in finding a satisfactory supplier for a silicone rubber coated polyester transport belt, evaluation of materials and coatings have been made in the lab. Satisfactory frictional characteristics were achieved with an Ecusta polyester belt coated with a General Electric silicone rubber. Future belts will be coated commercially.[1]

Ultrasonic spray systems are being investigated for uniform application of plasticizers and fluids to the tow. The aerosol produced by such a system should provide better distribution of the applied liquid resulting in less variation in filter firmness.[2]

III PROJECT EXPO

The electrical control cabinet for the dual extruder foam line was received and is being installed. Evaluation of the process equipment should start by mid-April.

IV ASSISTANCE TO MANUFACTURING

Hauni recommended various machine modifications to the KDF-2 plugmaker to reduce hot melt problems associated with porous plugwrap. These modifications have been made and several hot melts are to be tested.

V REFERENCES

[1]Research Notebook #6360 - D. Laslie
[2]Research Notebook #6349 - W. Nichols

W. A. Nichols

/bjn

2022151854

Source: https://www.industrydocuments.ucsf.edu/docs/xxxm0000

CHARGE NUMBER : 2305

PROJECT TITLE : Flavor Development

PROJECT LEADER: J. W. Swain

PERIOD COVERED: March 1-31, 1977

DATE OF REPORT: April 4, 1977

WRITTEN BY : J. W. Swain

I. RL Flavor Development

Additive levels were modified in Pilot Plant tests of URL-150B to improve filling power and flavor. Several of the URL test sheets showed improved C.V. values. These test sheets are currently being screened for flavor improvement compared to the URL-150B control at 27.5% blend levels. Firmness tests and larger panel testing are planned for the most acceptable modifications.

Modification of reaction flavor levels are currently being tested in the Pilot Plant to improve the filling power of URL without changing the flavor.

Development of reaction flavors to duplicate Oriental character from URL looks promising at a 5% replacement level.

II. Reaction Flavors

Subjective differences noted among various sugars in reaction flavors are being evaluated for low delivery cigarettes. In-house testing of flavored models has shown improved flavor response. Virginia Panel testing of the most acceptable model has been requested.

Reaction flavors from amino acids, sugars and organic acids in alcohol have shown a smoothing effect on cigarettes containing 30% RL. Evaluation of other combinations of precursors is in progress.

Carbonized materials have been evaluated which were flavored with reaction flavors. Subjectively these were smoother and thinner than the untreated materials.

III. References

1. Notebook #7033; Pages 77-95.

2. Notebook #7061; Pages 20-32.

3. Notebook #7088; Pages 20-31.

J. W. Swain

2022151855

Source: https://www.industrydocuments.ucsf.edu/docs/xxxm0000

CHARGE NUMBER : 2306

PROJECT TITLE : Flavor Transfer

PROJECT LEADER: R. M. Ikeda

PERIOD COVERED: March 1-31, 1977

DATE OF REPORT: April 4, 1977

WRITTEN BY : R. M. Ikeda

I. Smoke Flavor

A. Sulfur Compounds[1]

Selected fractions separated from smoke condensate reported last month were further separated by TLC using less polar (benzene) and more polar (acetone) developing solvents. Only minor differences in the resolution of the sulfur containing compounds were observed. A stainless steel (SS) GC column was packed for use in GC/MS identification. The SS column was made to match as closely as possible the glass column used in this study. Two of the sulfur containing compounds were adsorbed when separated on the SS column but the remaining sulfur containing compounds were not affected. A neutral fraction from smoke condensate was separated on TLC for GC/MS identification. The three eluted fractions were rechromatographed but only minor improvements in separations were observed. These fractions will be used for GC/MS identification.

B. Sidestream and Cigarette Butt Odors[2]

A program was started to measure sidestream odor and to reduce cigarette butt odor. An apparatus for measuring sidestream odor is being designed by the Engineering Group. Cigarettes were prepared with 0, 10, 20 and 50 mg of carbon in the filters to determine its effect on cigarette butt odor. These cigarettes were machine smoked and butts subjectively evaluated for odor. The odor intensity of the butts decreased with increasing amounts of carbon. Cigarettes were also prepared with CA filters overwrapped with Ecusta carbon paper with the intention of reducing butt odor but not gas phase components. No conclusive effect on butt odor was observed.

II. Casings and Flavors

A. Filler Sweep Analyses[3]

Filler sweep analyses were run on samples of Kent, Kent Golden Lights, Decade, Decade Menthol and Marlboro cigarettes.

2022151856

Source: https://www.industrydocuments.ucsf.edu/docs/xxxm0000

The chromatogram from Kent and Kent Golden Lights were almost identical while each of the other cigarettes had at least seven or more enhanced or unique peaks. Filler sweeps analyses were also carried out on uncased burley and bright filler and on ET. A number of differences were noted in the chromatogram of each sample. Further samples will be run to determine if these differences are characteristic of each tobacco. Capillary GC/MS runs were carried out on the commercial cigarette samples to identify their characteristic component.

B. Aftercut Markers[4]

Because of the insolubility of the hydrocarbons in the aftercut, other compounds which can be separated as a group were investigated. Benzoic and toluic acids were tried as markers but these acids are already present in tobacco. Trimethylphenols appear to serve as suitable markers since these compounds elute in a relatively clear area in the GC scan of the phenolic fraction extracted from cigarette filler. Addition at 5 ppm can be easily detected. Cigarettes are being made with these markers to evaluate the samples both subjectively and analytically.

III. References

1. Notebook #7090; Pages 13-28.

2. Notebook #7104; Pages 1-20.

3. Notebook #6995; Pages 55-64.

4. Notebook #6927; Pages 94-100.
Notebook #7118; Page 1.

R M Ikeda

R. M. Ikeda

/ec

2022151857

Source: https://www.industrydocuments.ucsf.edu/docs/xxxm0000

CHARGE NUMBER: 2500

PROGRAM TITLE: Synthesis of Tobacco Additives

PERIOD COVERED: March 1-31, 1977

PROJECT LEADER: E. B. Sanders

DATE OF REPORT: April 4, 1977

I. FLAVOR-RELEASE CHEMISTRY

A procedure was established for the isolation of pure guiacyl β-D-glucopyranoside utilizing ion exchange chromatography. Vanillin 2,3,4,6-tetra-O-acetyl-β-D-glucopyranoside (CR-1436) and p-cresyl β-D-glucopyranoside (CR-1493) were added to the CR-file.[1]

A 50 g sample of poly(isopropenyl acetate) has been prepared and submitted to Development for evaluation as a potential acetic acid-release agent. Approximately 150 g of poly(allyl 3-methyl-1-butene-3-yl carbonate) has been prepared *via* polymerization of the corresponding monomer. The sample has been turned over to Gus Keritsis for incorporation into a suitable sheet material for evaluation as an isoprene-release system.[2]

The phenyllithium mediated condensation of tetramethylpyrazine with benzaldehyde has given a good yield of 1-phenyl-2-(3,4,6-trimethyl-2-pyrazinyl)ethanol.[3] Pyrolysis of the product at 480° gave benzaldehyde in about 80% yield and tetramethylpyrazine in about 70% yield.[1] This compound represents the first successful synthesis of a pyrazine-release system.

II. ALKALOID CHEMISTRY

A number of reducing agents have been tried in order to maximize the amount of *cis*-3'-methylnicotine from the reduction of 3'-methylmyosmine. The best result (6:4 *cis/trans*) was obtained *via* catalytic reduction over Raney nickel in ethanol containing sodium hydroxide. The compound will be purified by elution chromatography subsequent to methylation. A sample of *trans*-3'-methylnicotine was prepared by tosylation of *trans*-3'-hydroxymethylnicotine followed by reduction of the tosylate. The following compounds were added to the CR-file: 2-(4-nitrophenyl)-1,2-pyrroline (CR-1484), 1-methyl-2-(4-methylphenyl)pyrrolidine

2022151858

Source: https://www.industrydocuments.ucsf.edu/docs/xxxm0000

(CR-1485), 2-(2-methylphenyl)-1,2-pyrroline (CR-1487), N'-methyl-2-methylanatabine (CR-1488), 2-(3-nitrophenyl)-1,2-pyrroline (CR-1489), 2-(2-methylphenyl)-pyrrolidine (CR-1490), 1-(1-pyrrolidinyl)-2-(2-pyridyl)propane (CR-1491), and 1-(2-ethyl-3-picolyl)pyrrolidine (CR-1492).[4]

A sample of 4-carbethoxypyrrolizidin-2,3-dione was prepared by condensation of ethyl (2-pyrrolidinyl)acetate with diethyl oxalate. Attempts were made to remove the carbomethoxy group by hydrolysis and decarboxylation using a wide assortment of reagents. Low yields, at best, of the desired dione were obtained.[5]

III. AMINO SUGAR CHEMISTRY

The thermolysis of aqueous solutions of 2-deoxy-2-amino-D-glucose was carried out for 15, 60 and 240 min at 100 and 150°. Each sample following thermolysis was separated into insoluble, soluble dialyzable, and soluble nondialyzable fractions. All three fractions contained approximately the same percentage of C, H, N, and O according to elemental analyses. Thermolysis at 150° for 60 min gives about equal amounts of all three fractions. Consequently these conditions will be used for large scale work.[6]

Studies have been initiated to convert 2-deoxy-2,5-fructosazine into 2,5-dideoxy-2,5-fructosazine. Two procedures which are being investigated are the direct reductive cleavage of the hydroxyl group using hydroiodic acid and reduction of the pyrazine ring to the dihydropyrazine system using sodium hydrosulfite followed by acid catalyzed dehydration to give the desired product. Both reactions are presently under investigation.[6]

Reaction of 1,2-dideoxy-1,2-diamino-D-glucitol with benzil has been carried out to give 2,3-diphenyl-5-tetrahydroxybutyl-5,6-dihydropyrazine. The structure of the product has been confirmed by nmr and mass spectra. Treatment of the dihydropyrazine with acetic acid led to rapid disappearance of the starting material to give two products which have not yet been characterized.[3]

IV. CUSTOM SYNTHESIS

Large-scale synthesis of guiacyl β-D-glucopyranoside has been initiated . Synthesis of the tetraacetyl glycoside has been completed, and the desired product will shortly be obtained using ion exchange chromatography.[7]

2022151859

Source: https://www.industrydocuments.ucsf.edu/docs/xxxm0000

V. MISCELLANEOUS

The glue stripper program is essentially complete experimentally. Four optimized stripping systems have been developed. All four have been compared with one another and with Magnus 642-D, the best commercial formulation. All four systems outperformed the Magnus 642-D.[8]

VI. REFERENCES

1.	Armstrong, D. D.	7021
2.	Grubbs, H. J.	7115
3.	Houminer, Y.	7098
4.	Secor, H. V.	7126
5.	Edwards, W. B.	7113
6.	Kite, G. F.	7124
7.	DeBardeleben, J. F.	7101
8.	Van Auken, T. V.	7100

/slb

Edward B. Sanders

2022151860

Source: https://www.industrydocuments.ucsf.edu/docs/xxxm0000

CHARGE NUMBER:	2501
PROGRAM TITLE:	Nuclear & Radiochemistry of Smoke
PERIOD COVERED:	March 5--April 8, 1977
PROJECT LEADER:	R. W. Jenkins, Jr.
DATE OF REPORT:	April 12, 1977

Structural carbohydrate determinations have been obtained on the stems from the leaf washing of four harvests. No significant differences were noted as a function of stalk position. The preliminary results on the ^{210}Po content in the WSC as determined by the Martell procedure on the third harvest show no significant reduction. The results on the soluble ^{210}Po in the third harvest also show only a small reduction by leaf washing.

These results are not totally unexpected as the largest washing effects were thought to take place with the bottom (Harvest 1) leaves.

The experimental data on the variability of the chemical composition of various size smoke particles have been reduced. Previous results were verified which show that there are very little differences in the chemical composition of smoke particles ranging from about 0.5μ to 1.8μ in diameter. Particles smaller than 0.5μ, down to 0.1μ, do show markedly different compositions. By the use of cigarettes individually labelled with ^{14}C-bright, ^{14}C-Oriental, ^{14}C-burley, ^{14}C-sugar, ^{14}C-glycerol and ^{14}C-cigarette paper, the actual contribution of each ingredient in the 1R1 cigarette to these small particles has been demonstrated. On a relative basis, bright tobacco, glycerol and invert sugar contribute proportionally less to the small (less than 0.5μ) particles and the Oriental, burley and paper (cellulose) contribute more to the larger particles. Further analyses are underway to determine whether a mass balance has been established.

At the request of Development personnel, a preliminary test was conducted in the Greenhouse to determine the possible utility of the potassium nitrate crystals as a fertilizer material. This material is from the Pilot Plant denitration process for RL. A greenhouse pot test using sand and Ky. 31 Fescue grass combined with various fertilizer treatments was completed. The results of this test indicate

2022151861

Source: https://www.industrydocuments.ucsf.edu/docs/xxxm0000

that under the conditions of this particular experiment the potassium nitrate did in certain cases compare favorably in performance to the regular greenhouse nutrient solution as a fertilizer material to provide a source of nitrogen and potassium. For more information see the Special Report entitled "Preliminary Greenhouse Test of Potassium Nitrate Materials" (Accession No. 77-062), which has been prepared.

A series of greenhouse experiments is being conducted with T. Laszlo, Project No. 1803, to determine the possible utility and effectiveness of using microwave energy to treat tobacco soil for the control of weeds by killing the weed seed to prevent germination. Experimental variables such as soil moisture, seed, duration of treatment, *etc.*, are being studied. Greenhouse pot tests are in progress.

REFERENCES

1. Barlow, K. 7099
2. Bass, R. T. 6896
3. Chavis, M. K. 6599
4. Comes, R. A. 7062
5. Counts, M. E. 7043
6. Core, M. T. 7044
7. Edmonds, M. D. 6727
8. Francis, B. W. 6521
9. Newell, G. C. 6783
10. Segura, G. 6514

/slb

2022151862

Source: https://www.industrydocuments.ucsf.edu/docs/xxxm0000

CHARGE NUMBER: 4009

PROJECT TITLE: Paper and Filler Modification

PROJECT LEADER: W. A. Geiszler

PERIOD COVERED: March, 1977

I. PAPER MODIFICATION

Cigarettes have been made and gas phase deliveries are being determined for the following series of tests: wood pulp versus flax pulp papers; paper treated with organic solvents; and 7 second paper with high citrate loading.[1]

Papers ranging from 4 to 37 seconds in Greiner permeability numbers have been tested for coal drop-off.[2] The lowest drop-off percentages occurred with 30 and 37 second papers at a 1% citrate level. Increasing the citrate loading to 2% caused an increase in coal drop-off for both 12 and 30 second papers. More testing is planned for very low citrate levels and for phosphate treated papers.

II. PERFORATED TIPPING PAPER

Specifications have been set for cigarette models for a VP test of patterned perforations in the tipping paper. A recheck of the control and test models, both with 50% filter dilution, is being carried out before making the test cigarettes.[3]

A new electrode holder has been installed on the electrical perforator for evaluation. The arrangement consists of tungsten electrodes within ceramic sheaths mounted in an aluminum plate. Some problems have been encountered with the electrodes arcing to the mounting plate, but such problems appear solvable. A more difficult problem has been the blowing of the arcs across the paper by the impinging air jets, which makes the perforation band wider than desired. Various air patterns are being tested to try to narrow the perforation band.

III. MENTHOL CIGARETTES

A VP test of Marlboro Green cigarettes with and without TEG in the filter plasticizer has been shipped.[4]

Menthol aftercut spraying tests have been run in the semi-works to identify the cause of menthol spraying losses.[5] Filler analyses are in progress.

2022151863

Source: https://www.industrydocuments.ucsf.edu/docs/xxxm0000

IV. CIGARETTE TECHNOLOGY

Comparison of dynamic and steady-state dilution measurements on unlit cigarettes show the dynamic reading to be 92% of the steady-state reading. Dynamic dilution is the fraction of a 35 cc/2 second puff drawn through the tipping paper. Steady-state dilution is the fraction of the flow rate drawn through the tipping paper while 17.5 cc/second is steadily drawn on the cigarette.

W. A. Geiszler

/bjn

References

[1]R. K. Greene, Notebook 7108, pp. 14, 18, 26
[2]W. A. Geiszler, Notebook 6912, pp. 82-83
[3]R. K. Greene, Notebook 7108, pp. 25, 32
[4]R. K. Greene, Notebook 7108, p. 24
[5]W. A. Geiszler, Notebook 6912, p. 84
[6]W. A. Geiszler, Notebook 6912, pp. 78-79

2022151864

Source: https://www.industrydocuments.ucsf.edu/docs/xxxm0000

CHARGE NUMBER: 4010

PROJECT TITLE: Brand Development

PROJECT LEADER: W. G. Houck, Jr.

PERIOD COVERED: March, 1977

I. BRAND DEVELOPMENT

A. Marlboro Lights 85

Specifications for the original four models scheduled for HTI testing were changed and further models had to be developed. The first set of these did not meet specifications and are currently being remade.[1] HTI shipment should be feasible by the end of April.

B. Marlboro Lights 100

Three models of a Marlboro Lights 100 are scheduled for HTI testing. These include CA/plastic versus all CA filters and cork versus white tipping.[2]

C. Alpine with Benkert Tipping

Preliminary specifications were completed and transferred to manufacturing.

D. B&H 100's

Regular - 10, 14 and 16 mg models of the B&H 100 have been prepared for future brand modification and/or new product candidates. The 14 and 16 mg candidates are scheduled for possible market testing while the 10 mg model is scheduled for HTI testing.[3]

HTI testing of a 15 mg candidate was completed. The control B&H 100 was preferred by B&H smokers (51/38%) while the lower delivery candidate tended to be preferred by other non-menthol smokers (38/46%).[4]

Menthol - 10, 12 and 14 mg B&H menthol 100's are scheduled for VP testing.

E. Virginia Slims Extra Milds

Two candidates, one with a light green cigarette paper, are currently in VP testing.[5]

2022151865

Source: https://www.industrydocuments.ucsf.edu/docs/xxxm0000

F. Marlboro Tar Reductions

Marlboro 80's, 85's, and 100's have been prepared at 16, 14 and 10 mg (100 mm) deliveries with EP (electrically perforated) tipping for possible product testing.

II. INSTRUMENT DEVELOPMENT

An instrument that measures circumference via a laser beam was received (rental) and set up. Preliminary evaluations look promising, especially for non-wrapped filters or filters wrapped with porous plug wrap.

W. G. Houck, Jr.

/bjn

[1]HTI Tests 1226/1227
1228/1229
1230/1231
1232/1233

[2]HTI Test 5033/5034

[3]HTI Test 8147/8148

[4]HTI Test 8145/8146

[5]VP Tests V-8516
V-8517

2022151866

Source: https://www.industrydocuments.ucsf.edu/docs/xxxm0000

PROJECT NUMBER: 6505

PROJECT TITLE: SPECIAL INVESTIGATIONS: TOBACCO AND CIGARETTE PROPERTIES

PROJECT LEADER: E. L. WATTS

PERIOD COVERED: MARCH 11, 1977 - APRIL 12, 1977

I. COAL STRENGTH STUDIES

A. Machine Parameters

Studies were conducted to determine the effects of two operating parameters - air flow across the cigarettes and puff volume - on the coal removal of Monitor #18 cigarettes. When air flow and puff volume were varied, a change in the burn rate of the cigarettes was observed; however, no change in the coal removal level was noted.

B. Cigarette Length

The ∿9% difference (absolute) in coal removal between Merit 85 and Merit 100 cigarettes was shown to be due to the difference in cigarette length. With all other factors being constant (paper, density, sieve fractions, etc.) Merit 100 and Merit 85 cigarettes were cut (from the tobacco rod end) to give cigarettes 80 mm in length. Coal strength testing on the cut cigarettes resulted in both brands having the same coal removal level.

C. Cigarette Circumference

Virginia Slims 100's, Saratoga 120's, and B & H 100's were cut from the filter end to yield tobacco rods of approximately 70 mm in length. With density and length being constant, circumference remained as the main variable. Coal strength testing indicated a decrease in coals removed with decreasing cigarette circumference. Additional testing will be conducted to better establish the relationship between coal strength and cigarette circumference.

D. Coal Strength Presentation

A presentation summarizing the coal strength procedure and results to date was made on April 4, 1977. A written summary of the testing and results discussed in that meeting is being prepared.

II. MOISTURIZED CARBON STUDIES

After one month of aging, no difference was observed in the gas phase smoke index of Parliament 100 cigarettes with standard carbon vs. moisturized carbon. The peak O.V. of both the control and experimental cigarettes is ∿12.4%.

Louis Watts

E. L. WATTS

2022151867

Source: https://www.industrydocuments.ucsf.edu/docs/xxxm0000

CHARGE NUMBER:	6906
PROGRAM TITLE:	BIOLOGICAL EFFECTS OF SMOKE
PERIOD COVERED:	March 1-31, 1977
PROJECT LEADER:	R. A. Pages
DATE OF REPORT:	April 7, 1977

I. *E. COLI* DIFFERENTIAL TOXICITY[1]

Experiments were continued to "scale down" the assay protocol by a factor of 10 and to incorporate a DMSO solvent system (to replace the Triton® X-100-H_2O- acetone system). The initial studies involved dose-response experiments with 2R1 and LTF-IIIA WSCs.

There were no significant differences in the dose-response curves between the "standard" and "scaled down" versions of the assay in DMSO. In the "scaled down" version, as expected, the activity values were ten times less than those observed in the "standard" assay. On the other hand, in making the transition between Triton®-H_2O and DMSO differences were observed. The most striking differences were that the dose-response curves were more nearly linear in DMSO and, most important, were also observed to intersect--a phenomenon we had not previously observed for these two WSCs in the "standard" assay.[2] The possible implications and consequences of these observations is being reviewed at this time. It is likely that additional experiments on other model WSCs will be conducted in the "scaled down" DMSO assay.

II. YEAST MITOTIC GENE CONVERSION[3]

1R1 and RCB WSCs were tested in a soft agar overlay assay at 30°C in the absence of microsomes. The results were compared with those obtained in a liquid culture assay[4] conducted at the same time. Both WSCs were active in each case. The liquid culture results agreed well with those reported previously.[4] The agar overlay results indicated a dose-response effect typical of that seen in the *S. typhimurium* assay; *i. e.*, an increase in activity followed by a decrease at higher doses (probably due to excessive toxicity). Additional experiments are planned. In addition, we also plan to include microsomal activation in the assay.

2022151868

Source: https://www.industrydocuments.ucsf.edu/docs/xxxm0000

III. *S. TYPHIMURIUM* MUTATION

As a first step in our program to test "fresher smoke" in this assay, a comparison was made between 2R1 and RL Reference WSC samples prepared by conventional Elmenhorst trapping *versus* impaction trapping. For impaction trapping 150 weight and RTD selected cigarettes were smoked in duplicate. One set of impaction trapped condensates was then dissolved directly in DMSO without processing. The second set was processed in a manner similar to that used for conventional WSC (addition of acetone and evaporation under reduced pressure). There were no apparent differences in the *S. typhimurium* activities (TA98) among the three 2R1 samples. For the RL Reference samples, however, there appeared to be large differences in the microsome-independent activities (Elmenhorst>>impaction-unprocessed>impaction processed). Additional experiments are planned with the RL Reference samples in order to confirm these observations.[5]

Grimmer fractions I, II, and III from 10 model WSCs[6] were tested. The results are currently being analyzed.[5]

An investigation of the microsome-dependent activity of 2R1 and RCB WSCs as a function of increasing amounts of either bovine serum albumin or 105,000g supernatant protein (from Aroclor®-induced rat liver homogenate) was completed. Neither of the two proteins was found to affect WSC activity. These results imply: 1) increased solubilization of WSC by protein does not increase activity; 2) there are no detoxification factors present in the soluble protein fraction of rat liver microsomes that can act to either increase or decrease WSC activity; and 3) exogenous, nonenzyme protein *(e.g.*, albumin) does not "trap" microsomally activated WSC species prior to their entrance into the bacterial cells.[7]

IV. L5178Y MOUSE CELL MUTATION[8,9]

Freshly prepared 2R1 WSC was tested in two experiments. A comparison of the results showed good reproducibility for both toxicity and activity (expressed as induced mutation frequency).

Preliminary results suggest: 1) it may be possible to store WSCs in DMSO at -80°C without affecting their activities in this assay; and 2) that the relative activities of three model WSCs is 2R1>Schweitzer RL made (from 1971 PMKRC of feedstock)>RCB. It must be stressed that the preceeding results are very preliminary and require further confirmation.

2022151869

Source: https://www.industrydocuments.ucsf.edu/docs/xxxm0000

V. REFERENCES

1. McCoy, W. R. Notebook 7116, pp. 14-16.

2. McCoy, W. R. Dose-Response Characterization of a Series of Model Whole Smoke Condensates in the Liquid Culture *Escherichia coli* Assay. P. M. Acc. No. 76-148.

3. Thompson, L. H. Notebook 7053, pp. 70-75.

4. Thompson, L. H. and Glenn, A. W. Yeast Mitotic Gene Conversion Assay: The Bioactivity of 1R1 and RCB Whole Smoke Condensates. P. M. Acc. No. 76-036.

5. Booker, J. J. Notebook 7057, p. 99.

6. Booker, J. J. and Neal, W. K. The Activity of Ten Whole Smoke Condensates Representing Models for Low and High Estimated Biological Activity in the *Salmonella typhimurium* Assay. P. M. Acc. No. 76-129.

7. Butler, N. and Neal, W. K. Notebook 7132, p. 1.

8. Penn, J. M. and McCuen, R. W. Notebook 7117, pp. 50-60.

9. Penn, J. M. and McCuen, R. W. Notebook 7060, p. 68.

/nwp

R. H. Pages II

2022151870

Source: https://www.industrydocuments.ucsf.edu/docs/xxxm0000

CHARGE NUMBER:	6908
PROGRAM TITLE:	SMOKE CONDENSATE STUDIES
PERIOD COVERED:	March 3-April 4, 1977
PROJECT LEADER:	W. N. Einolf
DATE OF REPORT:	April 12, 1977

I. CHEMICAL STUDIES

A sample of WSC from X6D3IM (burley) was fractionated through II/III of the Grimmer procedure, the methanol-water fraction was spotted on a tlc plate, and the plate was developed several times in two different solvent systems. After spraying with Dragendorff reagent, nicotine-1'-N-oxide was detected at about the 10 ppm level. The initial development serves to carry darkly-colored material away from the origin which helps to visualize the spot.[8]

N-nitrosonornicotine (NNN) was found in levels ranging from 0.15-1.7 µg/g in filler from RL, bright, bright with added nitrate, and burley with added nitrate products, using an extraction procedure and quantitation by hplc. The NNN values are only preliminary, since they have not been corrected for recovery or volume loss in the initial extraction. Our ^{14}C labeled NNN has arrived and recoveries are now being determined in each experiment. Quantitation is being done at 360 nm, since an interfering peak occurs at 260 nm (a peak maximum in the uv of NNN), with a consequent reduction of sensitivity.[1,3,8]

Following the encouraging results for nitrosopyrrolidine (N-PYR) determination (see January, 1977, Summary) two more smokings of cigarettes with ascorbate/ascorbic acid treated filler ("C" treated) were analyzed for N-PYR by the gc/cims method. Again, a reduction in N-PYR was noted for the "C" treated *versus* the control, averaging 25% for the three runs. Average values are 40.5 ng/cigt. for "C" treated and 54.3 ng/cigt. for control, both uncorrected for recovery.[4,6]

Gas chromatographic profiles are now being run for many of the WSC samples which are prepared routinely in order to monitor batch-to-batch variation. Since the profiles are giving more than the three expected peaks (nicotine, glycerine, and catechol), we are trying to monitor other peaks in the scan to determine whether they will be useful as measures of WSC reproducibility. One of the peaks, identified as triacetin, is in a portion of the gc which may allow us to use this method as a way to obtain triacetin values for WSC.[1,6]

2022151871

Source: https://www.industrydocuments.ucsf.edu/docs/xxxm0000

Data have been received from the Analytical Division showing some chemical differences between bright (X6D3RU) and bright + NO_3^- (X6D3NX) WSC samples. Those components which are reduced in X6D3NX relative to X6D3RU (control) are B(a)P, total alkaloids, total phenol, and catechol; components increased in X6D3NX *versus* control are triacetin, acetic acid, and the C_{10}-C_{20} fatty acids.[5]

A comparison was made among trapping methods to determine which was best for polynuclear aromatic hydrocarbon (PAH) profile analysis. Of the three methods, Elmenhorst trap, TPM, and impaction trapping, the latter was chosen because it is convenient, can handle a wide range of condensate mass, and gives slightly better recoveries for the low-boiling PAH. A comparison of the PAH gc profiles for the three methods shows no substantial differences in the higher-boiling PAH range.[7]

Cigarettes made from the J6BBH filler (X6D7CIS) were analyzed for MW 410 content in TPM by the tlc procedure (see Section II). The MW 410 content in TPM was about 1/2 the value obtained from other bright tobacco blends. The lower value for J6BBH TPM is probably not a typical value for bright cigarettes, and may be a function of growing conditions, or the fact that this tobacco was cured but not aged.[2,3]

II. INDICATORS OF BIOLOGICAL ACTIVITY

Seven additional cigarette samples were analyzed for MW 410 content. We did not find the expected reduction of MW 410 in the burley + NO_3^- sample relative to burley, nor did we find the analogous reduction for the bright + NO_3^- relative to the control. The cigarettes using blends of NSM and PMKRC fillers showed a reduction of MW 410 content as the amount of PMKRC was reduced in the blend. We plan to evaluate the correlation of MW 410 with estimated biological activity (EBA) based on model cigarette types, and to make estimates of EBA for other candidates from these results.[2]

III. CHEMICAL/BIOLOGICAL INTERACTIONS

Results of the *Salmonella* testing of fractions II and III from ten model WSC types are being analyzed by members of Charge Nos. 6906 and 6908. The NSM and LTF-IIA samples both show high specific activity in fraction III and no activity in fraction II.

2022151872

Source: https://www.industrydocuments.ucsf.edu/docs/xxxm0000

This phenomenon has not been observed in any other samples run to date. The LTF-IIIA sample continues to show similarities to the 2R1 tobacco blend in its *Salmonella* response.[3]

Work has continued on the fraction IIA (ethyl acetate) characterization for both 2R1 and X6D3WJ. After separation into acid/base/neutral subfractions, the acid and base subfractions gave the following components as identified tentatively by gc/ms:

2R1-IIA bases: nicotine (major), naphthyridine, bipyridyl

2R1-IIA acids: methylphenylacetate, methylphenylpropionate, phenol, and triacetin

X6D3WJ-IIA bases: 2,2,6-trimethyl-4-piperidone, nicotine

X6D3WJ-IIA acids: dimethylcyclopentanone or dihydrofuran, phenol, cresol, ethylphenol, acetin, ethylmethacrylate.

The amount of nicotine in the X6D3WJ-IIA bases subfraction is very low judging by peak height in the gc trace relative to the mass of material injected. Its origin is unknown at this time, but it must be considered an artifact.[3,6]

IV. REFERENCES

1. Baker, G. Notebook 6951, p. 91.

2. Daniel, C. Notebook 7065, pp. 91-92.

3. Ferguson, R. Notebook 7078, pp. 74-75.

4. Hellams, R. Notebook 6967, p. 71.

5. Katz, T. Notebook 7096, pp. 28-30.

6. Kinser, R. Notebook 7136, pp. 1,2.

7. Levins, R. Notebook 7095, pp. 56-57.

8. Millham, J. Notebook 6934, p. 100.

/nwp

2022151873

Source: https://www.industrydocuments.ucsf.edu/docs/xxxm0000